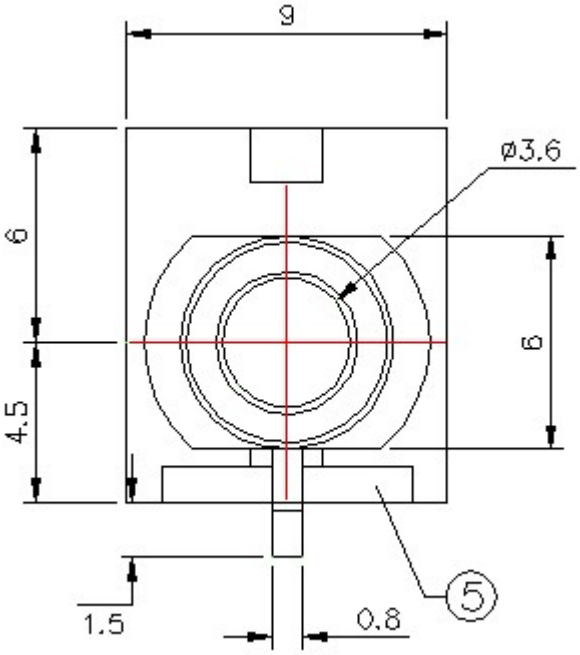

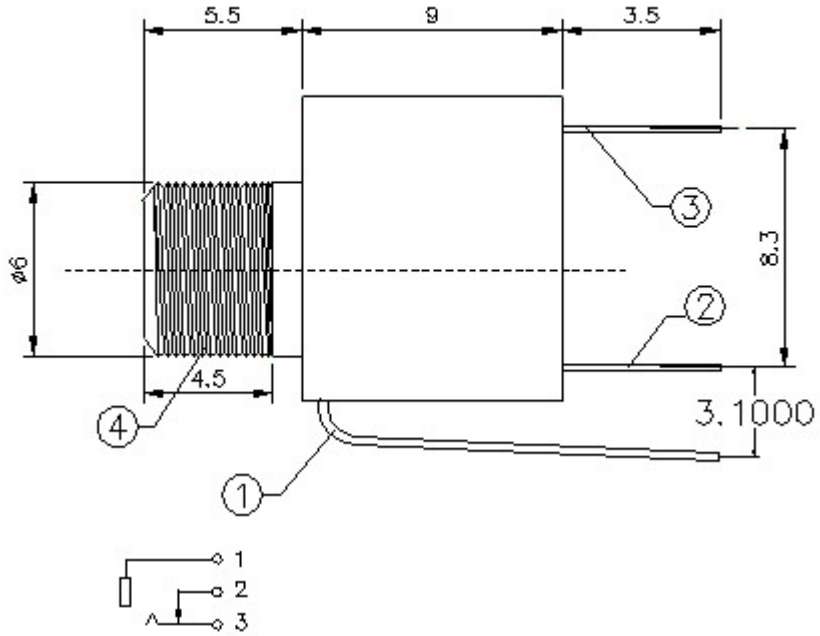

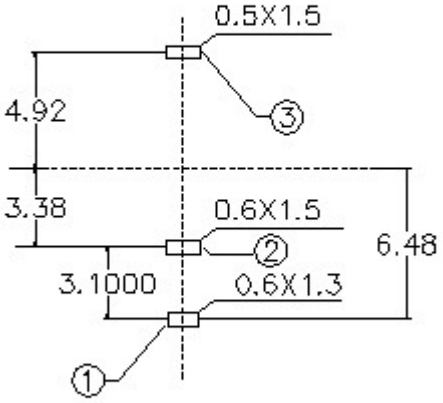

PCB LAYOUT (TOP VIEW)